Sollant
manufacturer and exporter

Sollant Dry Oil Free Screw Air Compressor

Shanghai Sollant Energy Saving Technology Co., Ltd

• Stable • Energy Saving • High Efficiency • Low Noise

CONTENTS

01 Introduction

02 Air compressor system introduction

03 Features

04 Comparison with water-lubricated, micro-oil screw

05 Application industry

1. Introduction

SLTOF-xxFD Fixed Speed

Power: 45~560kW
Displacement: 6.4~86.2m³/min
Working pressure: 0.7~1.0MPa

SLTOF-xxVD Variable Speed

Power: 45~315kW
Displacement: 3.7~52.5m³/min
Working pressure: 0.7~1.0MPa

SLTOF-FD Series Technical Parameters

Model	Working pressure		Capacity		Power		Noise	Air outlet pipe diameter	Net weight(kg)		Dimensions(mm)					
											Length	Width	Height	Length	Width	Height
	bar	psig	(m3/min)	cfm	kw	hp	dB		Air-cooled	Water-cooled	Air-cooled			Water-cooled		
SLTOF-45FD	7	102	7.8	275.5	45	60	69±3	DN50	2600	2650	2200	1400	2000	2200	1500	1720
	8	116	6.8	240.1	45	60	69±3	DN50	2600	2650	2200	1400	2000	2200	1500	1720
	10	145	6.4	226.2	45	60	69±3	DN50	2600	2650	2200	1400	2000	2200	1500	1720
SLTOF-55FD	7	102	9.8	346.1	55	75	69±3	DN50	2800	2850	2200	1400	2000	2200	1500	1720
	8	116	9.0	317.8	55	75	69±3	DN50	2800	2850	2200	1400	2000	2200	1500	1720
	10	145	7.8	275.5	55	75	69±3	DN50	2800	2850	2200	1400	2000	2200	1500	1720
SLTOF-75FD	7	102	13.0	459.1	75	100	70±3	DN50	2900	2850	2200	1400	2000	2200	1500	1720
	8	116	12.2	430.8	75	100	70±3	DN50	2900	2850	2200	1400	2000	2200	1500	1720
	10	145	11.2	395.5	75	100	70±3	DN50	2900	2850	2200	1400	2000	2200	1500	1720
SLTOF-90FD	7	102	16.0	565.0	90	120	71±3	DN50	3100	2850	2200	1400	2000	2200	1500	1720
	8	116	13.8	487.3	90	120	71±3	DN50	3100	2850	2200	1400	2000	2200	1500	1720
	10	145	13.1	462.6	90	120	71±3	DN50	3100	2850	2200	1400	2000	2200	1500	1720
SLTOF-110FD	7	102	20.6	727.5	110	150	71±3	DN65	3400	3450	3000	1990	2180	2800	1900	1990
	8	116	19.5	688.6	110	150	71±3	DN65	3400	3450	3000	1990	2180	2800	1900	1990
	10	145	18.8	663.9	110	150	71±3	DN65	3400	3450	3000	1990	2180	2800	1900	1990
SLTOF-132FD	7	102	24.8	875.8	132	175	73±3	DN65	3450	3500	3000	1990	2180	2800	1900	1990
	8	116	23.0	812.2	132	175	73±3	DN65	3450	3500	3000	1990	2180	2800	1900	1990
	10	145	19.5	688.6	132	175	73±3	DN65	3450	3500	3000	1990	2180	2800	1900	1990
SLTOF-160FD	7	102	28.5	1006.5	160	215	73±3	DN65	3550	3650	3000	1990	2180	2800	1900	1990
	8	116	26.3	928.8	160	215	73±3	DN65	3550	3650	3000	1990	2180	2800	1900	1990
	10	145	23.8	840.5	160	215	73±3	DN65	3550	3650	3000	1990	2180	2800	1900	1990
SLTOF-185FD	7	102	32.8	1158.3	185	250	74±3	DN65	3950	4050	3000	1990	2180	2800	1900	1990
	8	116	28.9	1020.6	185	250	74±3	DN65	3950	4050	3000	1990	2180	2800	1900	1990
	10	145	27.5	971.2	185	250	74±3	DN65	3950	4050	3000	1990	2180	2800	1900	1990
SLTOF-200FD	7	102	36.8	1299.6	200	270	74±3	DN100	5100	4500	4500	2000	2100	3100	2100	2065
	8	116	34.6	1221.9	200	270	74±3	DN100	5100	4500	4500	2000	2100	3100	2100	2065
	10	145	30.6	1080.6	200	270	74±3	DN100	5100	4500	4500	2000	2100	3100	2100	2065

Model	Working pressure		Capacity		Power		Noise	Air outlet pipe diameter	Net weight(kg)		Dimensions(mm)					
											Length	Width	Height	Length	Width	Height
	bar	psig	(m3/min)	cfm	kw	hp	dB		Air-cooled	Water-cooled	Air-cooled			Water-cooled		
SLTOF-220FD	7	102	41.5	1465.6	220	300	74±3	DN100	5600	5000	4500	2000	2100	3100	2100	2065
	8	116	37.3	1317.2	220	300	74±3	DN100	5600	5000	4500	2000	2100	3100	2100	2065
	10	145	33.0	1165.4	220	300	74±3	DN100	5600	5000	4500	2000	2100	3100	2100	2065
SLTOF-250FD	7	102	46.0	1624.5	250	350	74±3	DN100	5700	5200	4500	2000	2100	3100	2100	2065
	8	116	42.8	1511.5	250	350	74±3	DN100	5700	5200	4500	2000	2100	3100	2100	2065
	10	145	38.2	1347.7	250	350	74±3	DN100	5700	5200	4500	2000	2100	3100	2100	2065
SLTOF-280FD	7	102	48.6	1716.3	280	375	76±3	DN100	5800	5300	4500	2000	2100	3100	2100	2065
	8	116	47.5	1677.4	280	375	76±3	DN100	5800	5300	4500	2000	2100	3100	2100	2065
	10	145	45.0	1589.2	280	375	76±3	DN100	5800	5300	4500	2000	2100	3100	2100	2065
SLTOF-315FD	7	102	52.5	1854.0	315	422	77±3	DN100	6000	5400	4500	2000	2100	3100	2100	2065
	8	116	50.6	1786.9	315	422	77±3	DN100	6000	5400	4500	2000	2100	3100	2100	2065
	10	145	48.5	1712.8	315	422	77±3	DN100	6000	5400	4500	2000	2100	3100	2100	2065
SLTOF-355FD	7	102	65.0	2295.5	355	476	78±3	DN150	/	5500	/	/	/	5000	2400	2400
	8	116	59.0	2083.6	355	476	78±3	DN150	/	5500	/		/	5000	2400	2400
	10	145	52.2	1843.4	355	476	78±3	DN150	/	5500	/		/	5000	2400	2400
SLTOF-400FD	7	102	75.4	2662.7	400	536	78±3	DN150	/	5600	/	/	/	5000	2400	2400
	8	116	67.0	2366.1	400	536	78±3	DN150		5600	/	/	/	5000	2400	2400
	10	145	58.9	2080.0	400	536	78±3	DN150		5600	/			5000	2400	2400
SLTOF-450FD	7	102	78.5	2772.2	450	600	79±3	DN150	/	5600	/		/	5000	2400	2400
	8	116	77.3	2729.8	450	600	79±3	DN150		5600	/		/	5000	2400	2400
	10	145	66.5	2348.4	450	600	79±3	DN150	/	5600	/	/	/	5000	2400	2400
SLTOF-500FD	7	102	86.2	3044.1	500	670	79±3	DN150		6000	/	/	/	5000	2400	2400
	8	116	85.3	3012.3	500	670	79±3	DN150	/	6000	/		/	5000	2400	2400
	10	145	78.0	2754.5	500	670	79±3	DN150	/	6000	/			5000	2400	2400
SLTOF-560FD	10	145	85.0	3001.7	560	760	79±3	DN150	/	6000	/		/	5000	2400	2400

SLTOF-VD Series Technical Parameters

Model	Working pressure		Capacity		Power		Noise	Air outlet pipe diameter	Net weight(kg)		Dimensions(mm)					
											Length	Width	Height	Length	Width	Height
	bar	psig	(m3/min)	cfm	kw	hp	dB		Air-cooled	Water-cooled	Air-cooled			Water-cooled		
SLTOFV-45VD	7	102	4.5-7.8	159-275	45	60	69±3	DN50	2650	2700	2200	1400	2000	2200	1500	1720
	8	116	4.0-6.8	141-240	45	60	69±3	DN50	2650	2700	2200	1400	2000	2200	1500	1720
	10	145	3.7-6.4	132-226	45	60	69±3	DN50	2650	2700	2200	1400	2000	2200	1500	1720
SLTOFV-55VD	7	102	5.7-9.8	202-346	55	75	69±3	DN50	2850	2900	2200	1400	2000	2200	1500	1720
	8	116	5.2-9.0	182-318	55	75	69±3	DN50	2850	2900	2200	1400	2000	2200	1500	1720
	10	145	4.4-7.8	157-275	55	75	69±3	DN50	2850	2900	2200	1400	2000	2200	1500	1720
SLTOFV-75VD	7	102	7.6-13.0	268-459	75	100	70±3	DN50	2950	2900	2200	1400	2000	2200	1500	1720
	8	116	7.2-12.2	253-431	75	100	70±3	DN50	2950	2900	2200	1400	2000	2200	1500	1720
	10	145	6.6-11.2	234-396	75	100	70±3	DN50	2950	2900	2200	1400	2000	2200	1500	1720
SLTOFV-90VD	7	102	9.6-16.0	332-565	90	120	71±3	DN50	3000	2950	2200	1400	2000	2200	1500	1720
	8	116	8.1-13.8	286-487	90	120	71±3	DN50	3000	2950	2200	1400	2000	2200	1500	1720
	10	145	7.6-13.1	269-463	90	120	71±3	DN50	3000	2950	2200	1400	2000	2200	1500	1720
SLTOFV-110VD	7	102	12.1-20.6	429-727	110	150	71±3	DN65	3500	3550	3000	1990	2180	2800	1900	1990
	8	116	11.6-19.5	408-689	110	150	71±3	DN65	3500	3550	3000	1990	2180	2800	1900	1990
	10	145	11.1-18.8	391-664	110	150	71±3	DN65	3500	3550	3000	1990	2180	2800	1900	1990
SLTOFV-132VD	7	102	14.7-24.8	518-876	132	175	73±3	DN65	3550	3600	3000	1990	2180	2800	1900	1990
	8	116	13.6-23.0	480-812	132	175	73±3	DN65	3550	3600	3000	1990	2180	2800	1900	1990
	10	145	11.5-19.5	406-689	132	175	73±3	DN65	3550	3600	3000	1990	2180	2800	1900	1990
SLTOFV-160VD	7	102	16.9-28.5	596-1006	160	215	73±3	DN65	3650	3750	3000	1990	2180	2800	1900	1990
	8	116	15.6-26.3	550-929	160	215	73±3	DN65	3650	3750	3000	1990	2180	2800	1900	1990
	10	145	14.1-23.8	497-840	160	215	73±3	DN65	3650	3750	3000	1990	2180	2800	1900	1990
SLTOFV-185VD	7	102	19.5-32.8	687-1158	185	250	74±3	DN65	4100	4200	3000	1990	2180	2800	1900	1990
	8	116	17.1-28.9	605-1021	185	250	74±3	DN65	4100	4200	3000	1990	2180	2800	1900	1990
	10	145	16.3-27.5	575-971	185	250	74±3	DN65	4100	4200	3000	1990	2180	2800	1900	1990
SLTOFV-200VD	7	102	21.8-36.8	768-1300	200	270	74±3	DN100	5100	4500	4500	2000	2100	3100	2100	2065
	8	116	20.4-34.6	721-1222	200	270	74±3	DN100	5100	4500	4500	2000	2100	3100	2100	2065
	10	145	18.1-30.6	640-1081	200	270	74±3	DN100	5100	4500	4500	2000	2100	3100	2100	2065
SLTOF-220VD	7	102	24.9-41.5	879-1466	220	300	74±3	DN100	5600	5000	4500	2000	2100	3100	2100	2065
	8	116	22.4-37.3	790-1317	220	300	74±3	DN100	5600	5000	4500	2000	2100	3100	2100	2065
	10	145	19.8-33	699-1165	220	300	74±3	DN100	5600	5000	4500	2000	2100	3100	2100	2065
SLTOFV-250VD	7	102	27.3-46.0	964-1624	250	350	74±3	DN100	5700	5200	4500	2000	2100	3100	2100	2065
	8	116	25.3-42.8	893-1511	250	350	74±3	DN100	5700	5200	4500	2000	2100	3100	2100	2065
	10	145	22.7-38.2	803-1348	250	350	74±3	DN100	5700	5200	4500	2000	2100	3100	2100	2065
SLTOFV-280VD	7	102	31.6-48.6	116-1716	280	375	76±3	DN100	5800	5300	4500	2000	2100	3100	2100	2065
	8	116	30.9-47.5	1090-1677	280	375	76±3	DN100	5800	5300	4500	2000	2100	3100	2100	2065
	10	145	29.3-45	1033-1589	280	375	76±3	DN100	5800	5300	4500	2000	2100	3100	2100	2065
SLTOFV-315VD	7	102	34.1-52.5	1205-1854	315	422	77±3	DN100	6000	5400	4500	2000	2100	3100	2100	2065
	8	116	32.9-50.6	1161-1787	315	422	77±3	DN100	6000	5400	4500	2000	2100	3100	2100	2065
	10	145	31.5-48.5	1113-1713	315	422	77±3	DN100	6000	5400	4500	2000	2100	3100	2100	2065

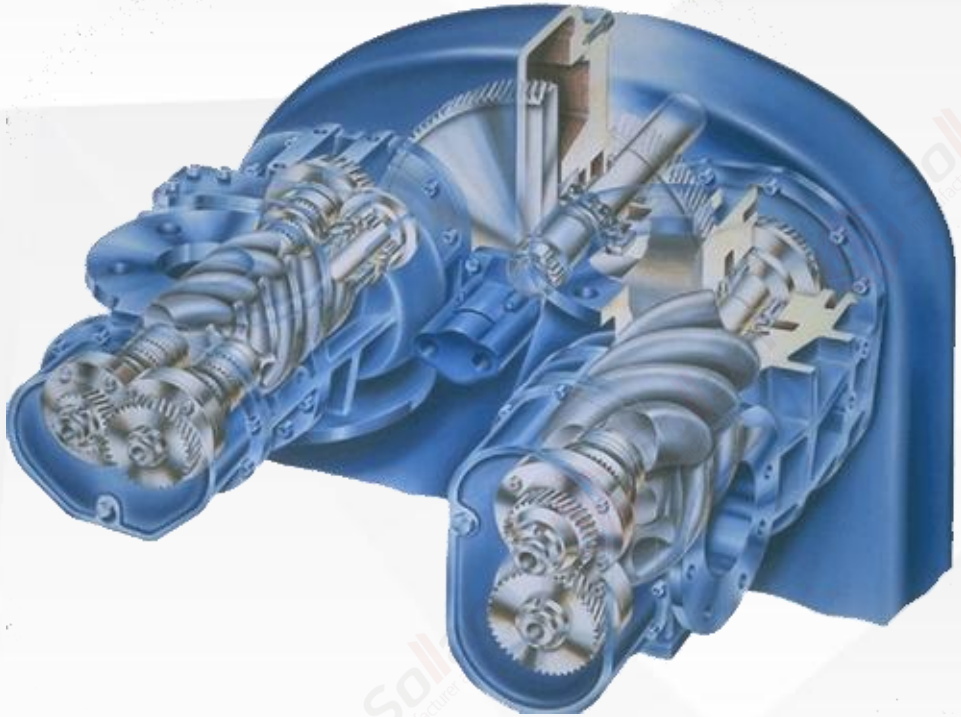

What is dry oil-free?

Level 0 oil-free, that is, the total oil content (oil brought in during compression + oil vapor in the air) index reaches ≤0.01mg/m³

"Oil-free" means that the gas is not in contact with oil at all during the compression process, that is, there is no oil lubrication between the compression chamber or the rotor of the compressor, but the bearings, gears and other parts in the compressor are still lubricated with ordinary lubricants. Lubricated in the same way, but between these lubricating parts and the compression chamber, an effective isolation shaft seal is adopted.

2.1 Market usage proportion

DEVELOPED COUNTRY

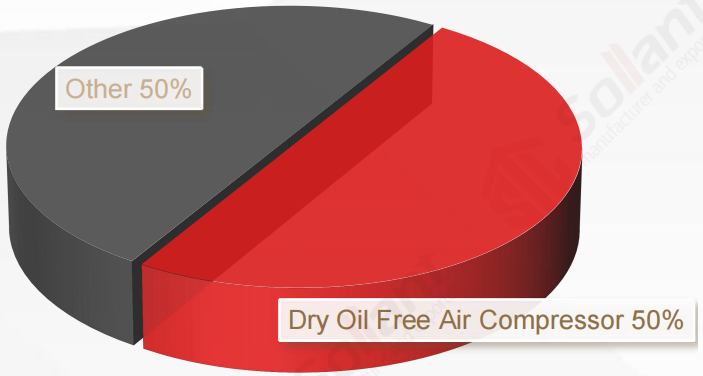

DEVELOPING COUNTRY

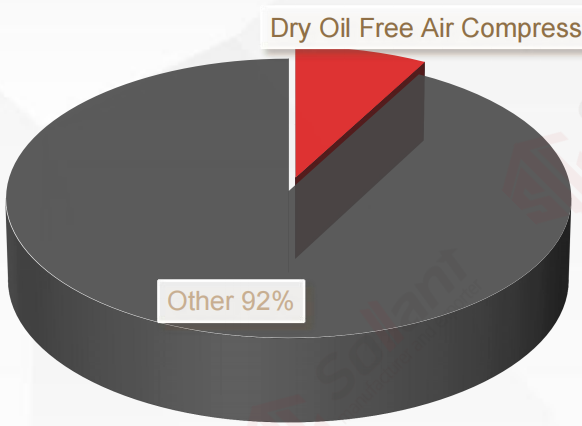

Risk of oil in compressed air

- Employee health damage
- Environmental emission pollution
- High energy consumption for oil removal
- The products produced by the factory are unqualified
- Reduced service life of compressed air system equipment
- The service life of the courage equipment in the production line is reduced
- Increased maintenance costs

2.2 System flow chart

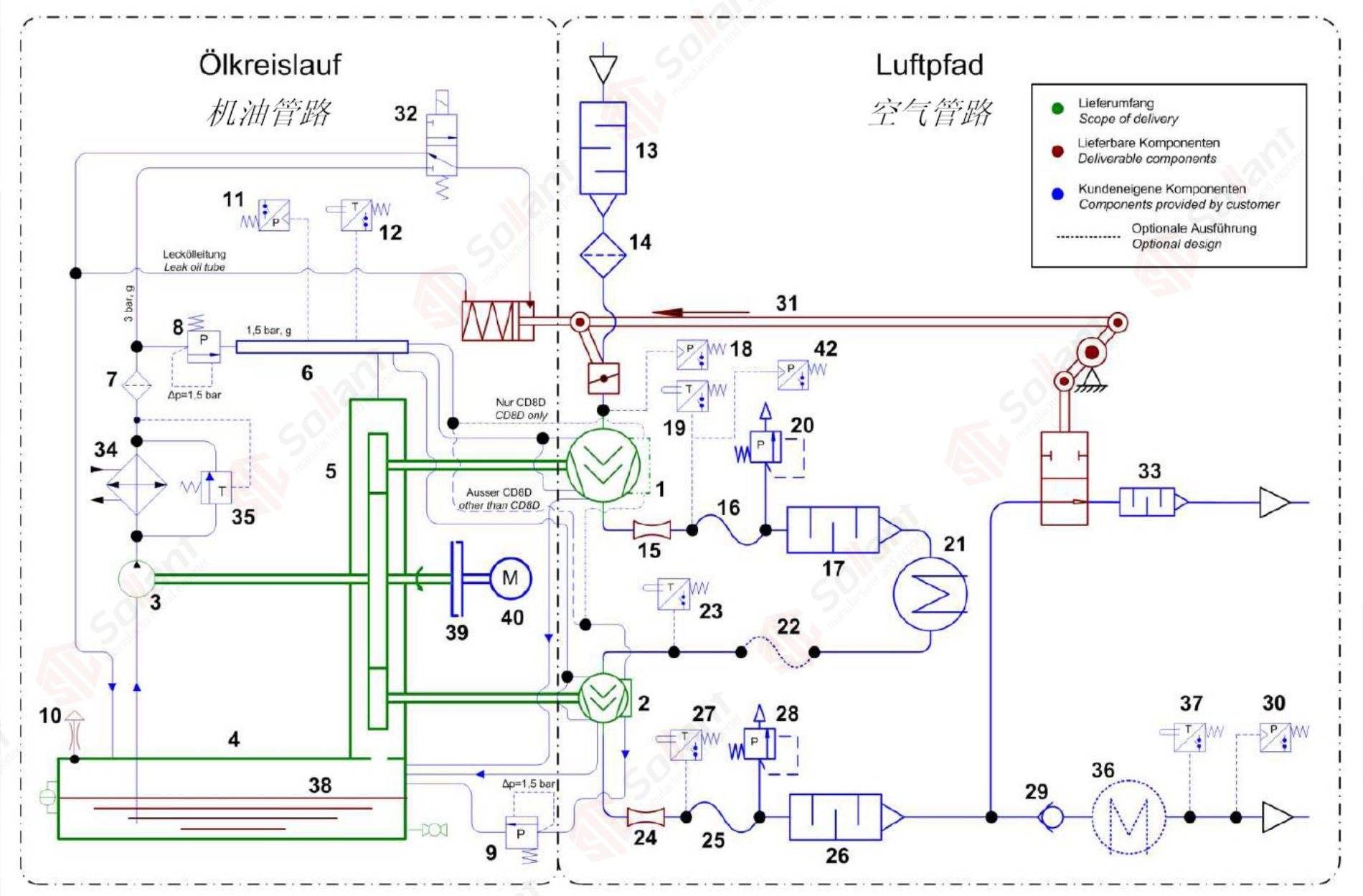

2.2 System flow chart

1. Low pressure-screw type air end (the first air end)	2. High pressure-screw type air end (second air end)	3. Oil pump
4. Oil tank device with sight glass and oil drain plug	5. Gear mechanism	6. Lube oil manifold
7. Lubricating oil filter	8. Hydraulic cylinder pressure limiting valve	9. Pressure limiting valve for lubricating oil manifold
10. Fuel tank vent	11. Oil supply pressure switch	12. Lubricating oil temperature switch
13. Suction silencer	14. Suction filter	16. Regulator
17. Muffler	18. Suction pressure switch	19. The exhaust temperature switch of the first main engine
20. Pressure relief valve	21. Intercooler	22. Regulator (optional)
23. Temperature switch	24. Venturi tube	25. Regulator
26. Muffler	27. Second main engine exhaust temperature switch	28. Pressure relief valve
29. Check valve	31. Inlet exhaust valve	32.3/2 solenoid valve
33. Diffuse silencer	34. Lubricating oil cooler	35. Constant temperature operation control valve
36. Secondary cooler (optional)	37. Temperature switch (optional)	38. Oil sump
39. Coupling	40. Drive motor	42. Pressure temperature switch between hosts

2.3 Piping system

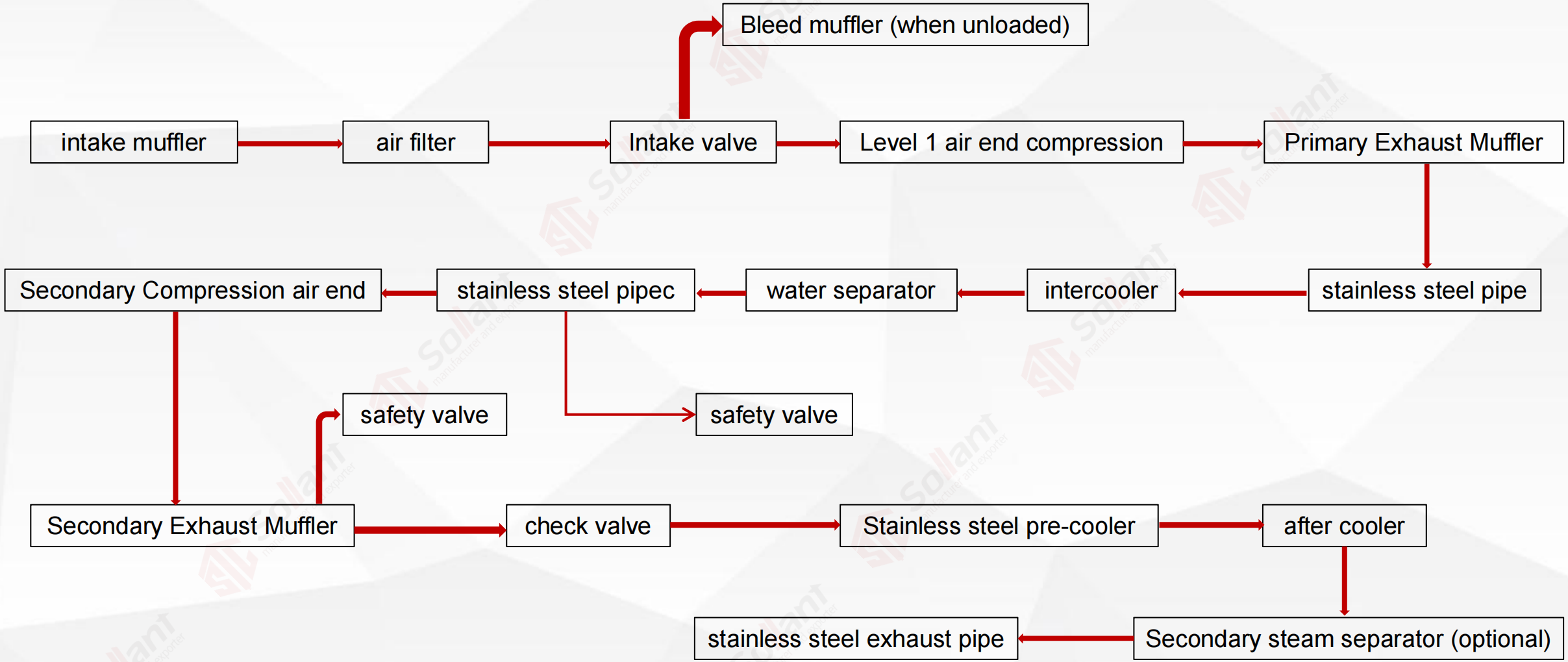

2.3 Piping system

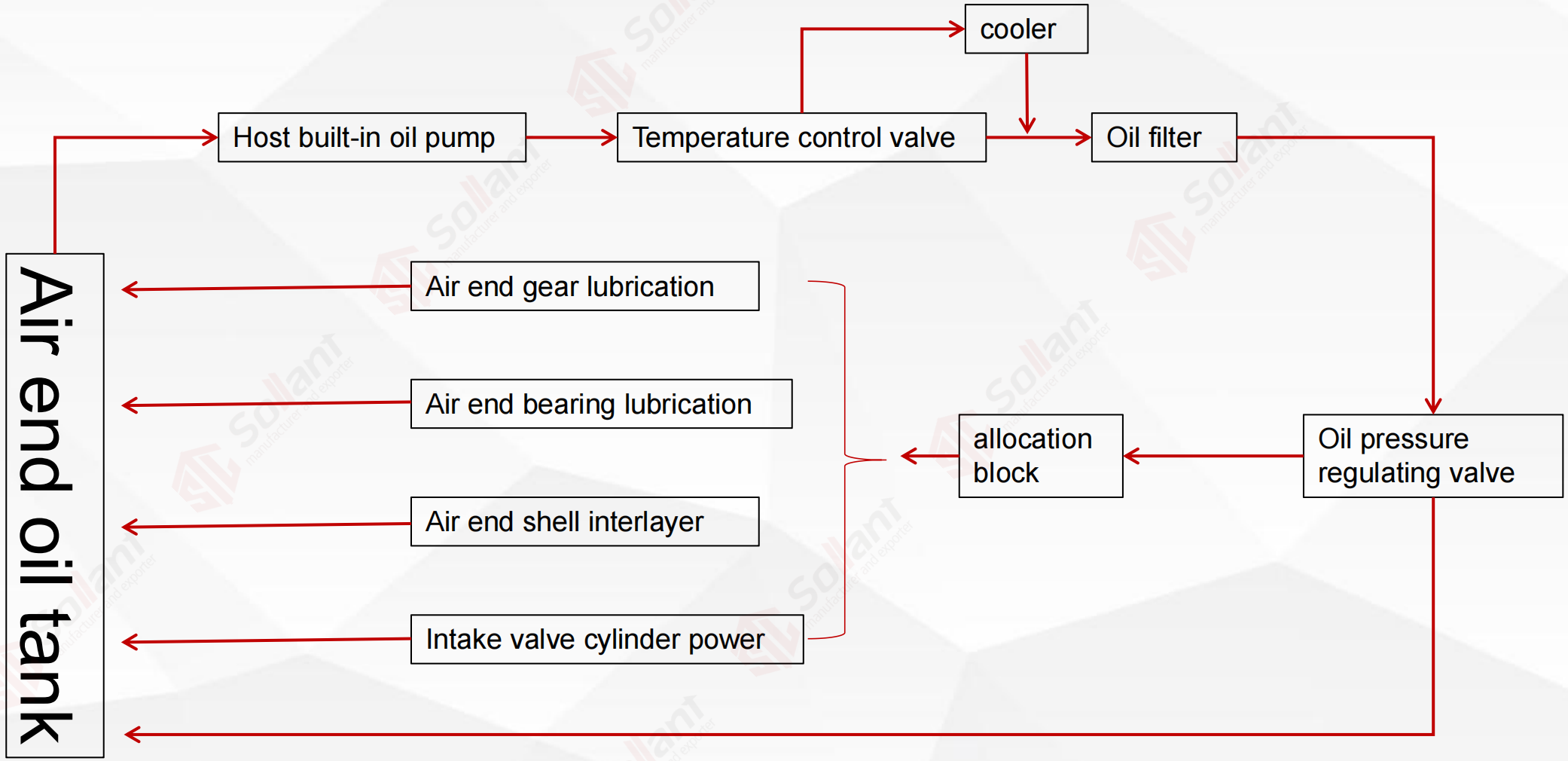

3.Features of dry oil-free air compressor

CLEAN

LOW NOISE

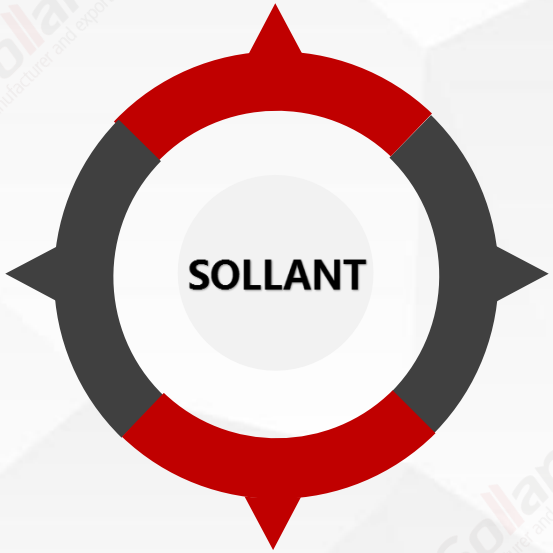

STABLIZE

INTELLIGENT

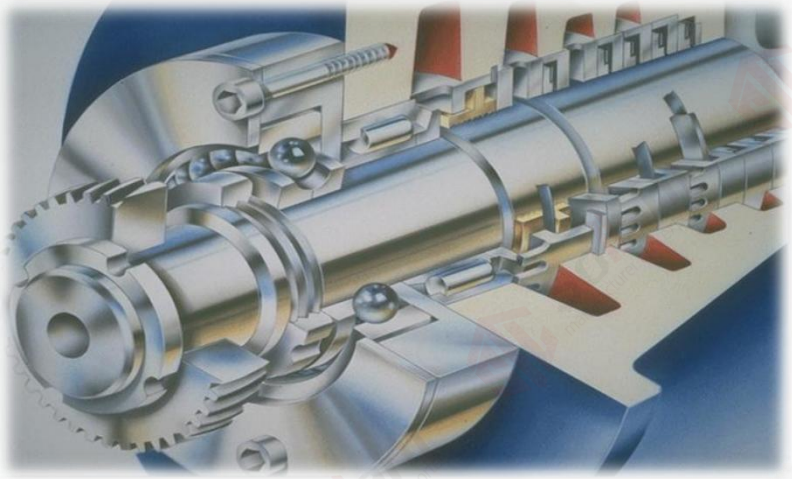

Airtight Guarantee of Air-end

The air compression chamber of the dry oil-free screw is completely sealed with the oil chamber. Once the lubricating oil in the oil chamber enters the compression chamber, the compressed air will contain lubricating oil. Therefore, in order to extend and provide reliable sealing, sollant oil-free screw compressor In the air side, a wear-free sealing system with a stainless steel spring-loaded metal ring is used, and the lubricating oil side is a wear-free sealing system with a copper labyrinth seal.

3.1 Features of dry oil-free air compressor - Clean

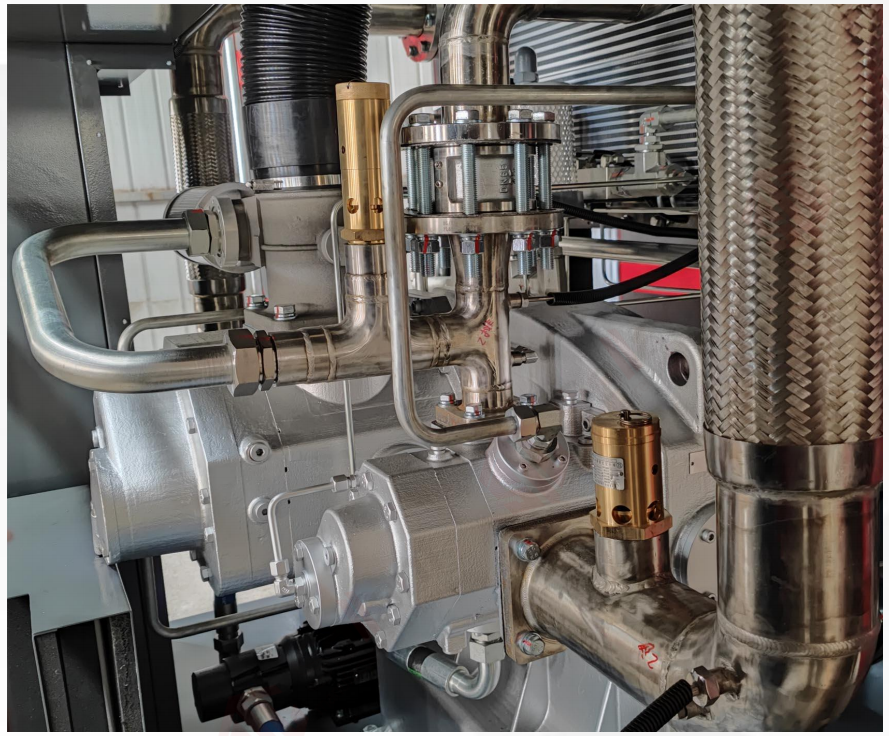

Stainless steel pipe

All gas pipelines use remedial steel pipelines to ensure no pollution on the compressed air transmission path

3.1 Features of dry oil-free air compressor - Clean

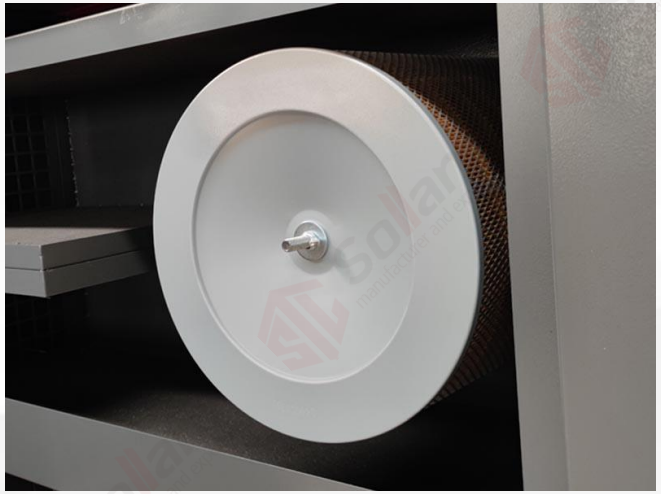

Filtering system

1. The air inlet is equipped with an air conditioner filter to filter large particles of dust

2. A high-efficiency air filter is installed before entering the air end, and the filtration accuracy is 0.3μm

3.1 Features of dry oil-free air compressor - Clean

Independent air intake

The compressed air inlet is independently taken in from the outside of the unit to ensure that the inhaled gas is oil-free

3.2 Features of dry oil-free air compressor - Low noise

Air-end noise reduction design

The high speed of the dry oil-free unit determines that the noise of the unit is high-frequency noise. SOLLANT’ s dry oil-free main engine is designed with a shell jacket, which reduces the high-frequency noise transmission of the main engine, and uses cooling water to reduce the temperature of the main engine

3.2 Features of dry oil-free air compressor - Low noise

Pipeline noise reduction design

Install a pipeline muffler at the outlet of each compressor main engine to reduce high-frequency noise and transmit it to the customer's use end along with the pipeline

3.2 Features of dry oil-free air compressor - Low noise

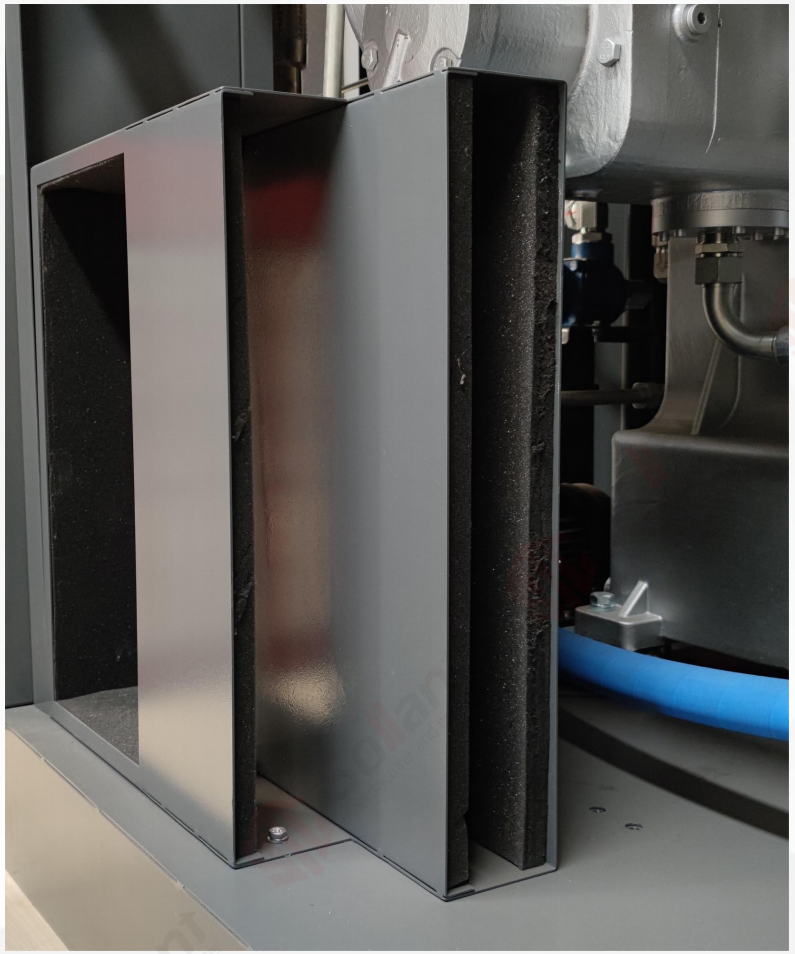

Structural Noise Reduction Design

- Add sound insulation panels inside the unit
- Add sound insulation baffles to all cooling air inlets
- Use the built-in centrifugal fan structure
- The joint of the door panel is sealed with a keel sealing strip

3.2 Features of dry oil-free air compressor - Low noise

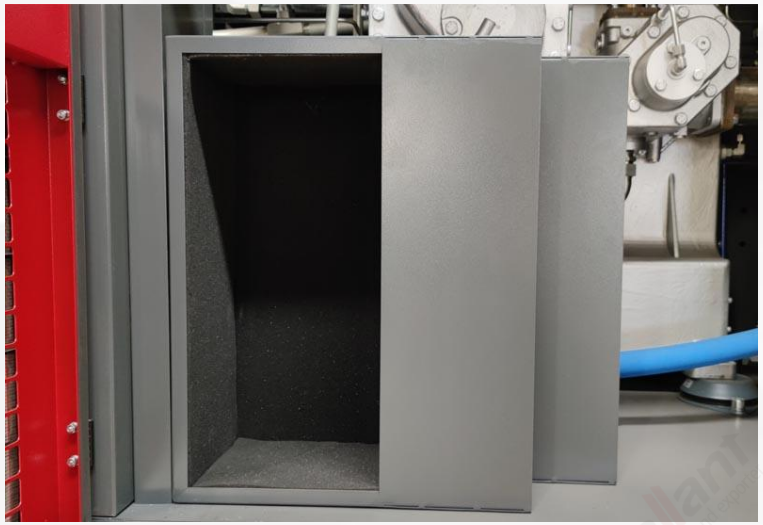

Sound-absorbing cotton noise reduction

Paste special sound-absorbing cotton for high-frequency noise on the sheet metal in the noise area, reflection and absorption are carried out at the same time, reducing noise and blocking transmission

3.3 Features of dry oil-free air compressor - Stablize

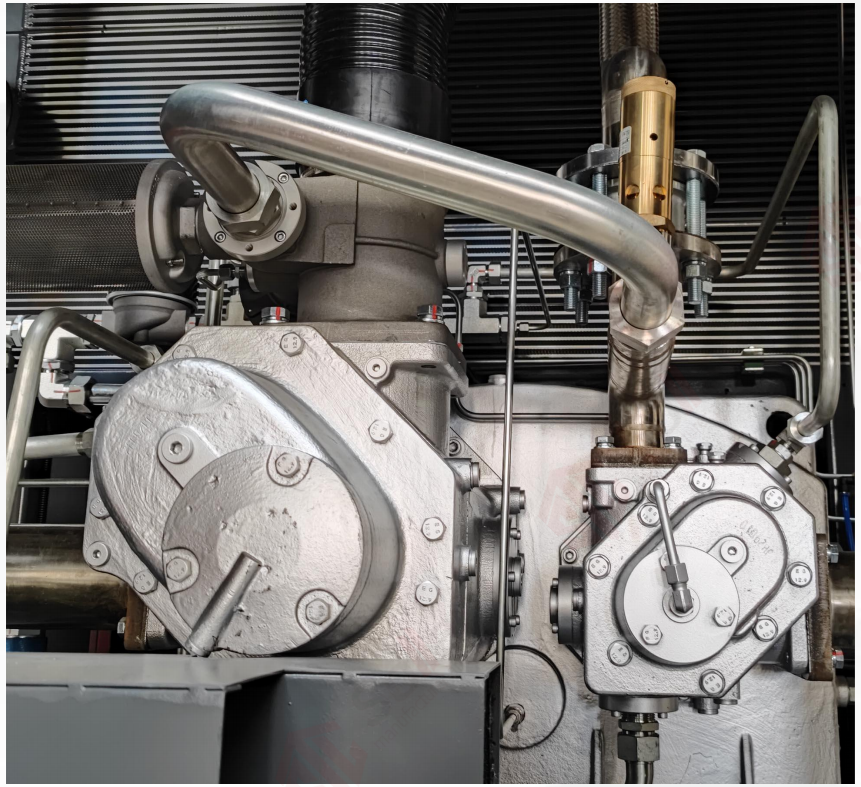

The air-end is stable

- The surface of the screw and the interior of the shell adopt special customized coating materials and coating processes to ensure the high temperature resistance, high pressure resistance, acid and alkali resistance and wear resistance of the rotor, and improve the service life
- The reliability of the non-contact unsealed structure is good
- The design of high temperature and high pressure resistant bearings greatly improves the service life of bearings
- Jacketed liquid-cooled shell, good cooling effect
- The gear shaft seal is designed to prevent leakage, even if the seal fails, it can leak back to the oil tank

3.3 Features of dry oil-free air compressor - Stablize

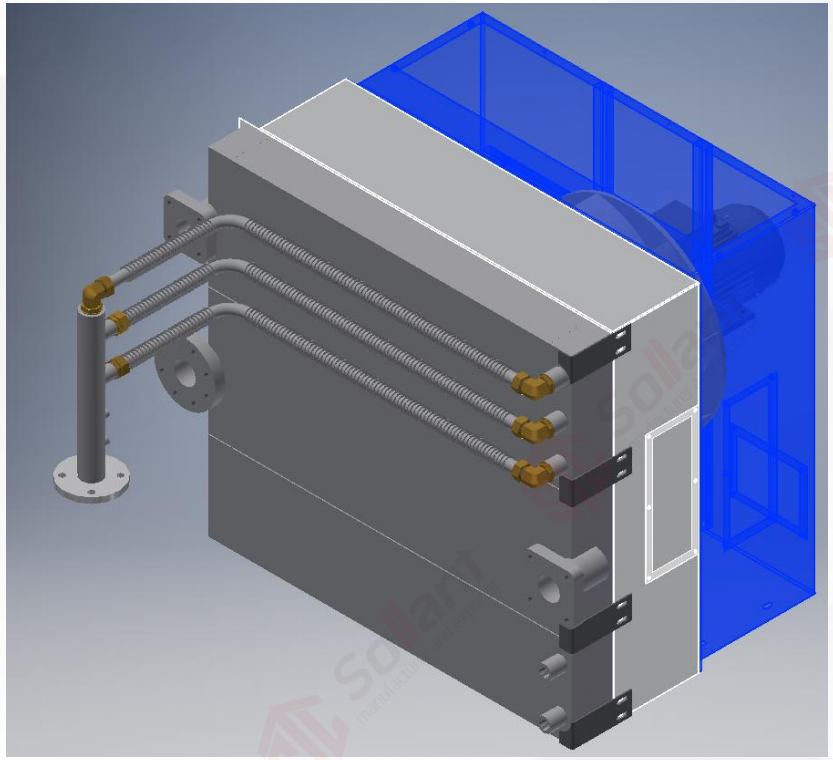

Vertical cooler

The cooler is installed vertically, with side suction and top row structure, and the large unit adopts a split cooler to reduce thermal stress and increase stability.

3.3 Features of dry oil-free air compressor - Stablize

Reasonable margin design

- Reserve 30%~50% margin for air filter, cooling system, etc., to ensure that the use requirements are met under different working conditions
- As a heavy-duty equipment, 10~15% margin is reserved for the electrical part, and it can continue to operate under individual special working conditions

Independent oil pump

The independent oil pump design is adopted to ensure the stable oil supply of the bearings. The oil pump suppliers are the same as Kobelco and Fusheng

3.3 Features of dry oil-free air compressor - Stablize

Mechanical oil pressure control design

A mechanical first-class device is added to the oil circuit to ensure that the oil supply pressure of the bearing is within the specified range

3.3 Features of dry oil-free air compressor - Stablize

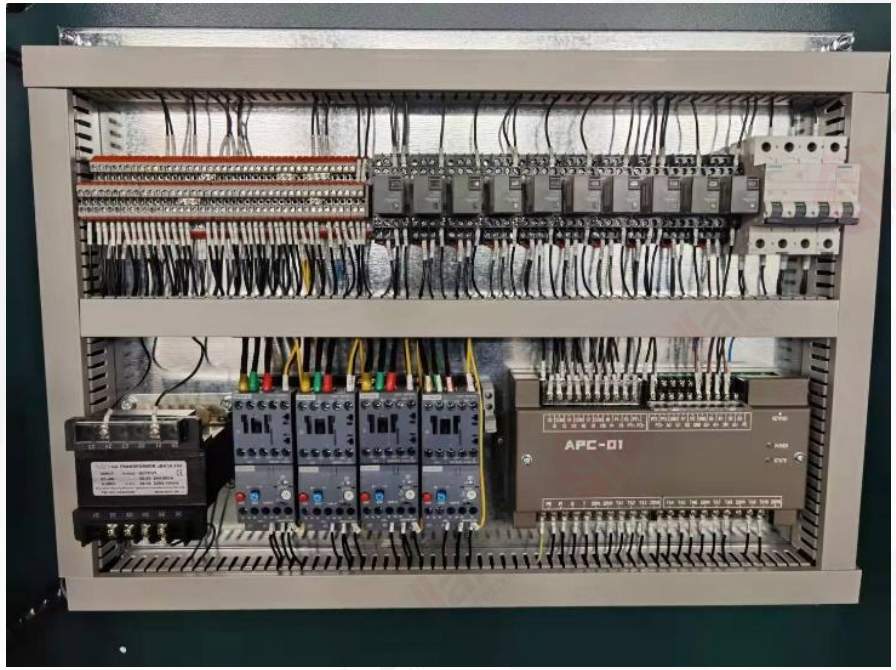

Intelligent monitoring

Special controller for frequency conversion dry oil-free air compressor developed by SOLLANT, 5-way pressure (first-stage exhaust, second-stage exhaust, oil pressure, cooling water pressure, antifreeze pressure), 8-way temperature detection, real-time monitoring of host operation state

3.4 Features of dry oil-free air compressor - Intelligent

➢ Multiple protection

The intelligent control system has functions such as voltage detection, phase sequence detection, current detection, running time accumulation, overload alarm, overpressure alarm, high temperature alarm, maintenance reminder, password protection with different permissions, etc., to ensure that the unit can run unattended 24 hours a day

➢ Constant pressure regulation

SLTOF-VD series units support constant pressure and frequency conversion adjustment of the main engine, and use more advanced algorithms for PID adjustment to ensure stable output of air supply pressure.

➢ Human communication interface

Large-screen color touch screen interface, easy-to-understand man-machine communication, different status reminders on the main interface, and sound and light alarm function

➢ Cloud IoT

Cloud IoT function, you can check the operating status of the unit on the mobile phone and monitor remotely

4.1 Compared with water injected screw compressor

Common ground

Air quality: all are oil-free units, and the compressed air can reach class0

Difference

- The structure of the main engine is different (water lubrication is single screw + star wheel, dry oil-free is double screw)
- Different lubrication methods (the lubricating medium of water lubricated is water, and the dry type is oil-free and non-lubricating medium)
- Different cooling methods (direct cooling by cooling water, cooling by cooling jacket)
- The exhaust temperature is different (the exhaust temperature of the dry oil-free main engine is high, and the built-in after-cooler of the unit is cooled)
- The exhaust pressure range is different (the dry oil-free 8bar unit can be adjusted between 3.5 and 8,)

Recommendations

1. ≤7m³/min (8bar) it is recommended to water injected screw compressor
2. >7m³/min (8bar) it is recommended to dry oil free air compressor

4.2 Compared with micro oil screw air compressor

Common ground

Twin screw compressor

Difference

- The quality of the compressed gas is different (the exhaust oil content of the micro-oil screw compressor is about 1~3ppm, and the exhaust quality of the dry oil-free screw compressor meets the requirements of class0.)
- Different lubrication methods (the lubricating medium of the micro-oil screw compressor is lubricating oil, and the dry oil-free screw has no lubricating medium)
- Different cooling methods (cooling oil direct cooling, cooling through cooling jacket)
- The exhaust pressure range is different (the dry oil-free 8bar unit can be adjusted between 3.5 and 8, and the adjustable range of the micro-oil screw compressor is small)
- The pressure upper limit is different (the micro-oil screw compressor can make a 40bar unit, and the dry oil-free screw compressor has a maximum pressure of 10bar)

5. Industry application

1. Used in textile, electronics, metallurgy, food, chemical industry, medicine, petroleum and air separation and other places that require pure oil-free compressed air.

2. Bulk cement tank trucks, and occasions for dry material transportation (such as grain, cement, coal powder, lime, sand, etc.)